Mortise and Maker
making connections one component at a time

peka Switzerland

PECASA

Pecasa Universal Bracket for TVs, Monitors, Mirrors and Pictures

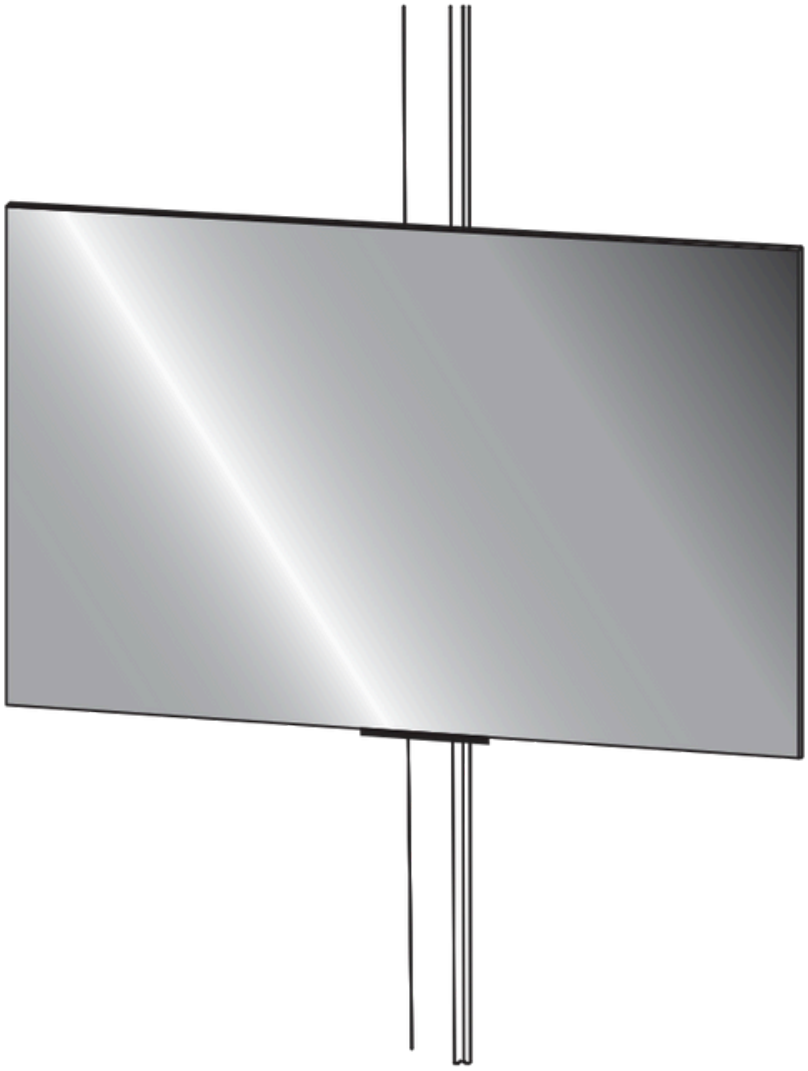

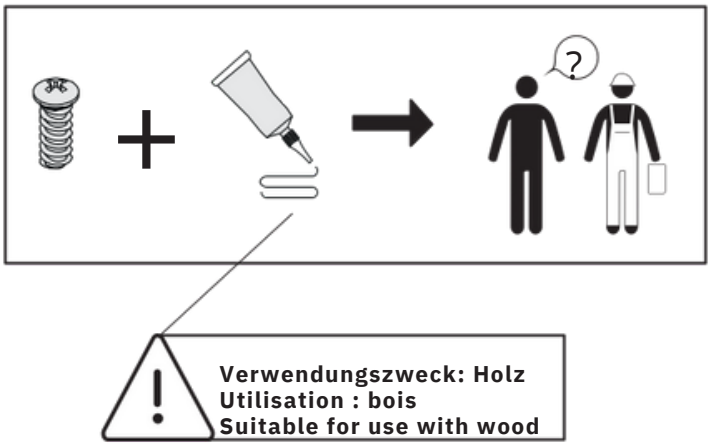
?
Verwendungszweck: Holz
Utilisation : bois
Suitable for use with wood

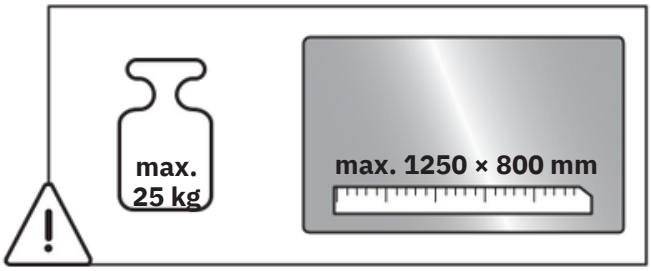
max.
25 kg
max. 1250 × 800 mm

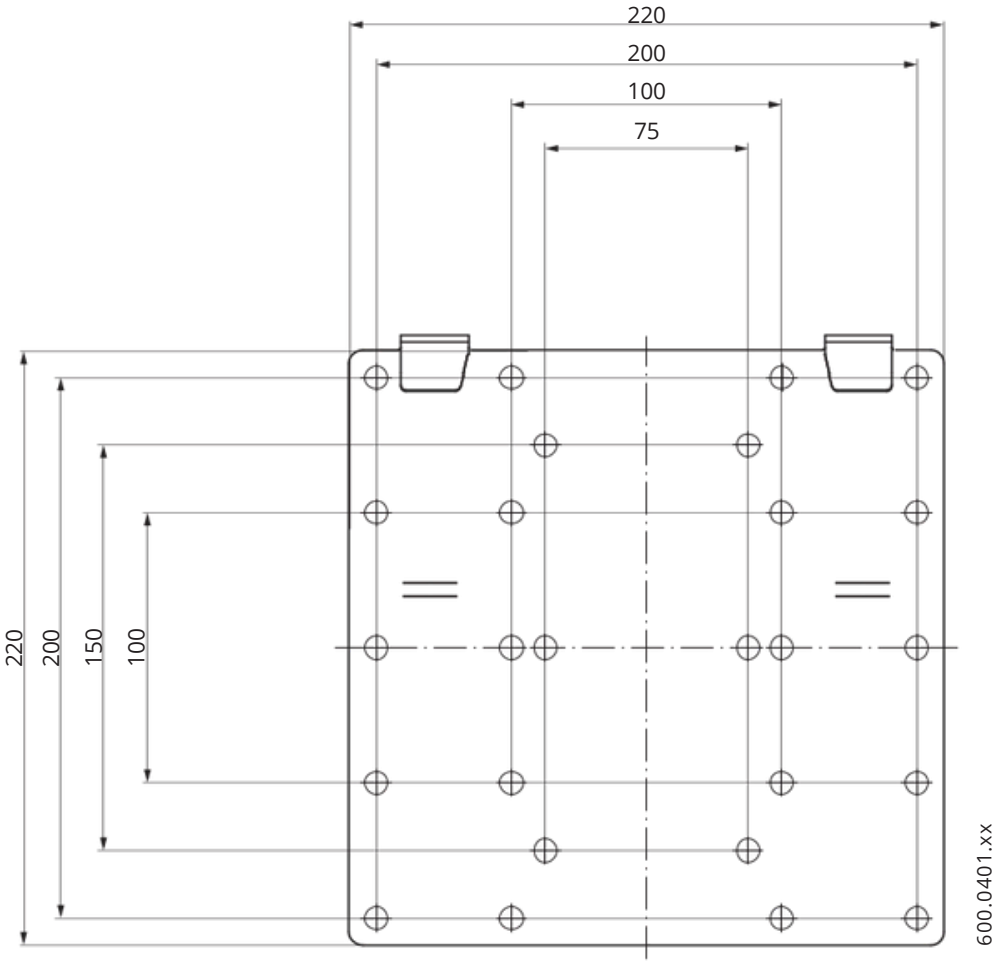
220
200
100
75
220
200
150
100
600.0401.xx

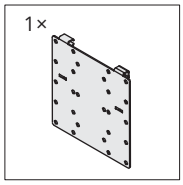
1×

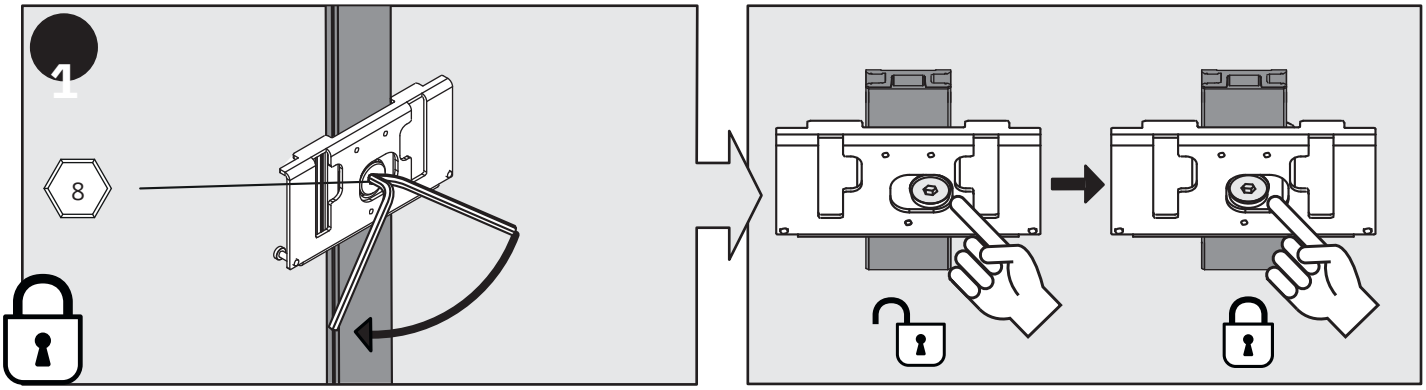
1
8

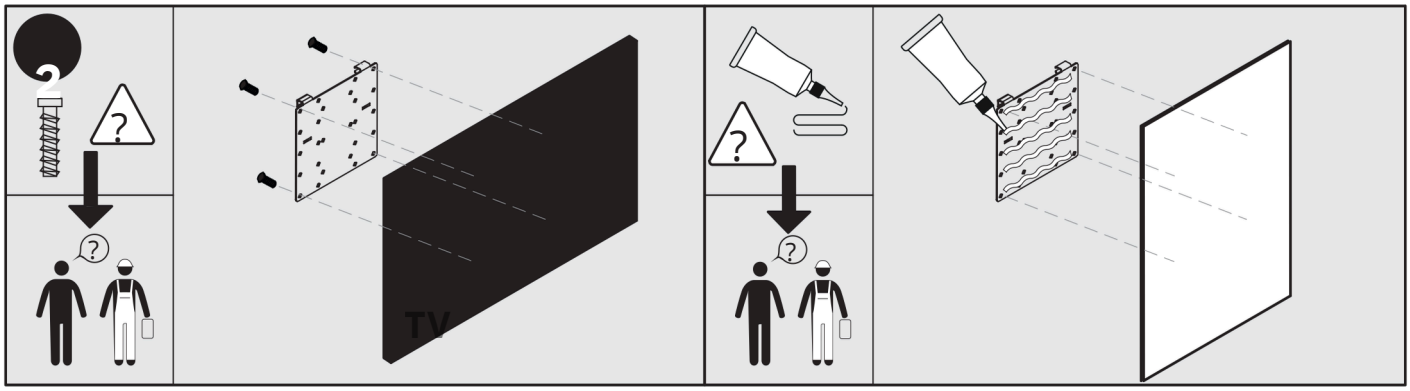
2
?
?
TV
?
?

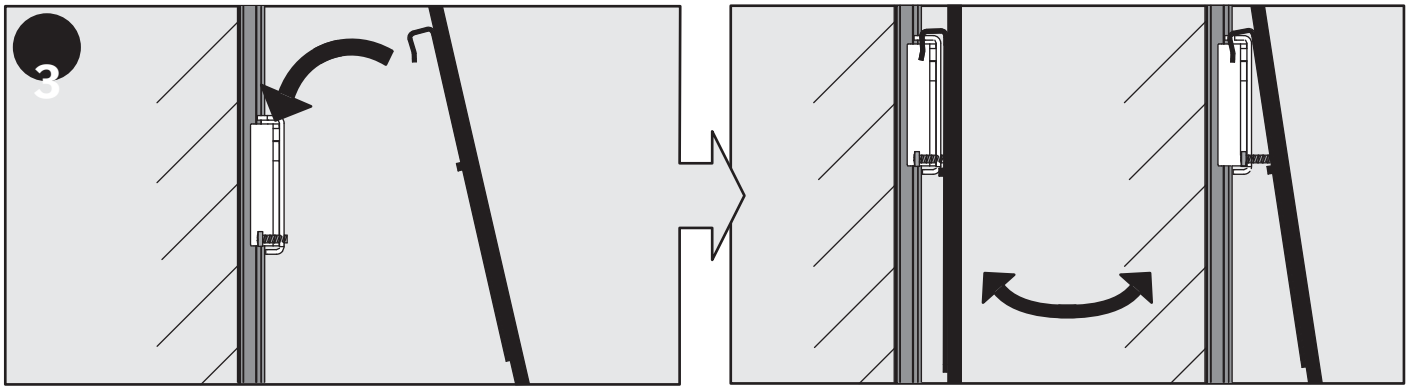
3

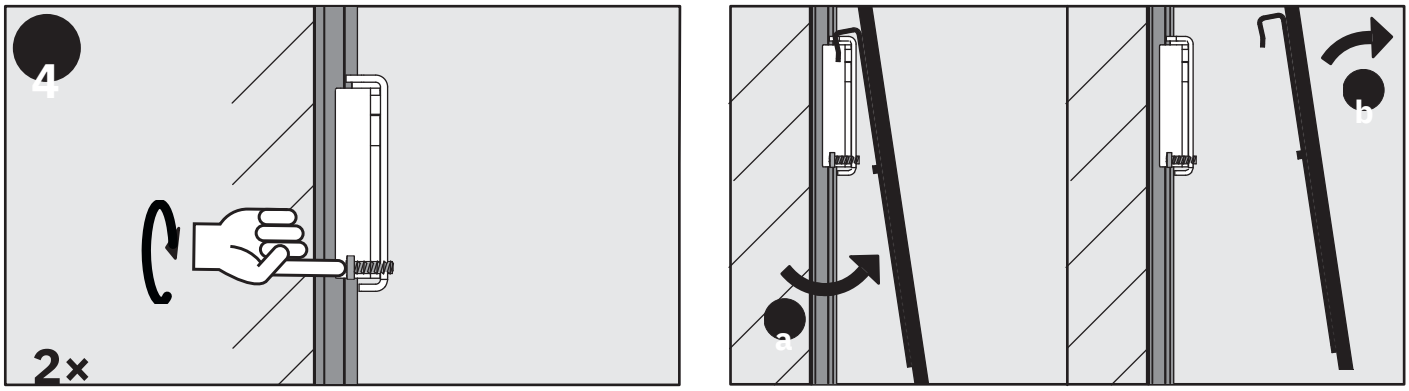
4
2×
a
b

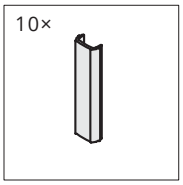
10×

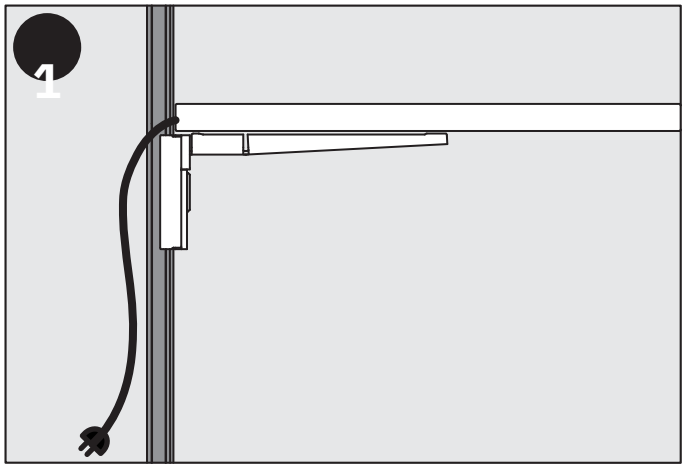
1

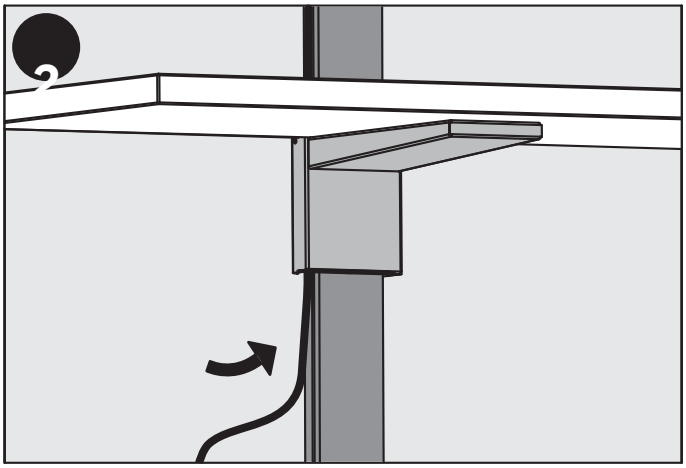
2

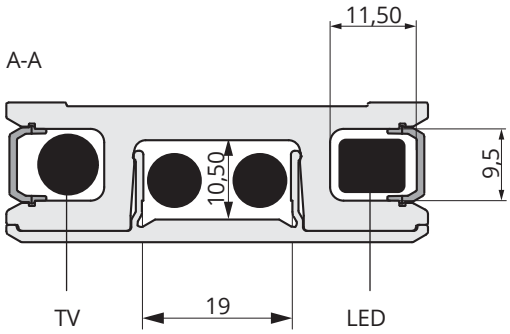
A-A
11,50
10,50
9,5
TV
19
LED

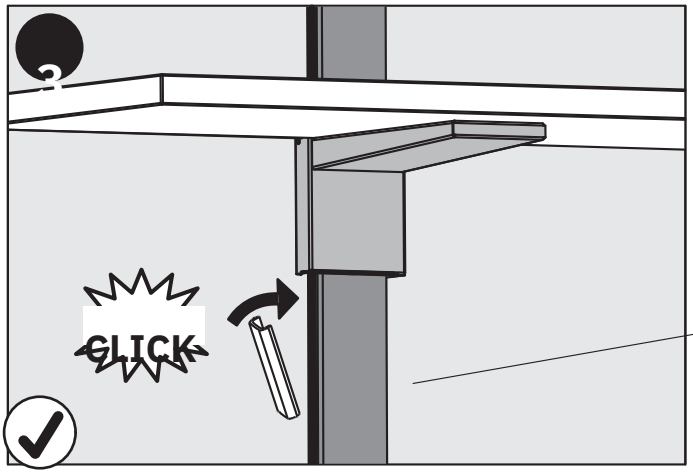
3
CLICK

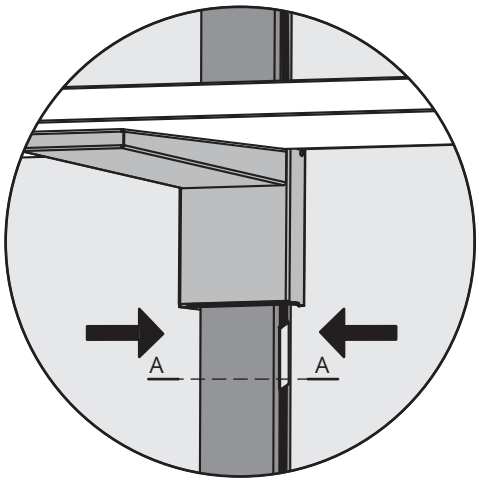
A
A